Fiberglass Round Dampers

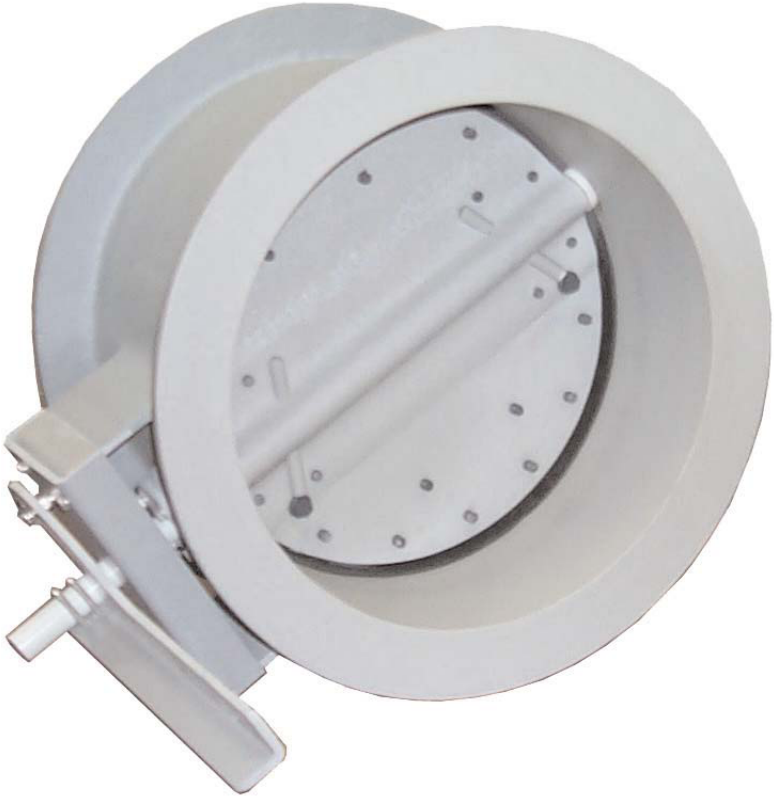

PCP Poly Composite Products, LLC

51 North Street / P.O. Box 400
LeRoy, NY 14482
Phone: (585) 768-7633 Fax: (585) 768-7634
Website: www.PolyCP.com
Email: sales@PolyCP.com

Round Damper Features

Polymil Products, Inc. round dampers are designed for control of air flow in round ductwork. They have all fiberglass reinforced construction for greater resistance to corrosive environments.

Features

- Sizes: 6" to 60" inside diameter.
- Construction: All FRP construction with non-metallic airstream hardware. Hardware is glass-filled polyurethane and is sealed to prevent leakage. Damper shafts are fiberglass with teflon shaft seals and rotate in teflon bearings. The blade consists of a neoprene wiper seal sandwiched between FRP disks.
- Hetron 99P resin standard.
- Flanges: Undrilled.
- Blade: Single, center pivoted blade with blade seals. Blade operates from fully closed to fully open.
- Hand operator
- Shaft, seals, and bearings are replaceable.
- Designed to withstand pressures up to 30 in. w.g. or more.

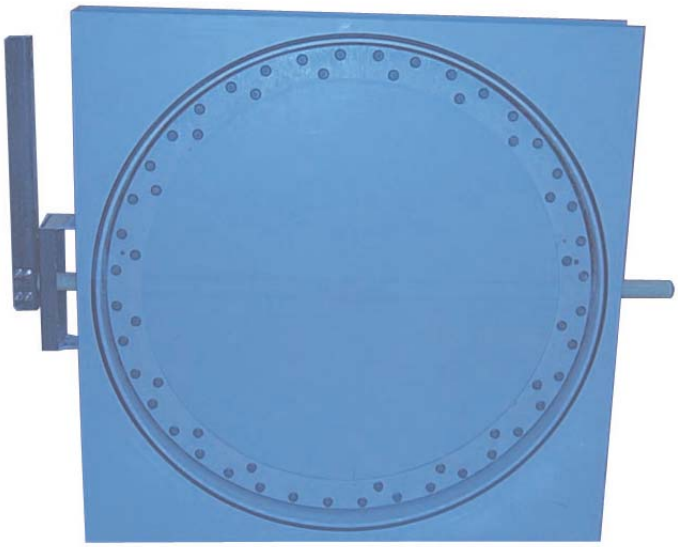

Available Options

- Other sizes available.
- Special resins for specific corrosive applications.
- Available with carbon impregnation for static grounding.
- Hardware: 304 SS, 316 SS, or monel
- Shaft: Vinylester or stainless steel
- Motor actuator
- Other blade seal materials
- Blade stops
- Custom flanges
- Custom designs.
- Special units with rectangular flanges for adapting to rectangular ducts are available
- Also Available: Round backdraft dampers with a butterfly type blade with neoprene blade seals. Round backdraft dampers are ideally suited for applications where control of backflow is desired, such as in multiple fan installations. The damper is designed to withstand static pressures of greater than 20 inches w.g.

Round Damper Dimensions

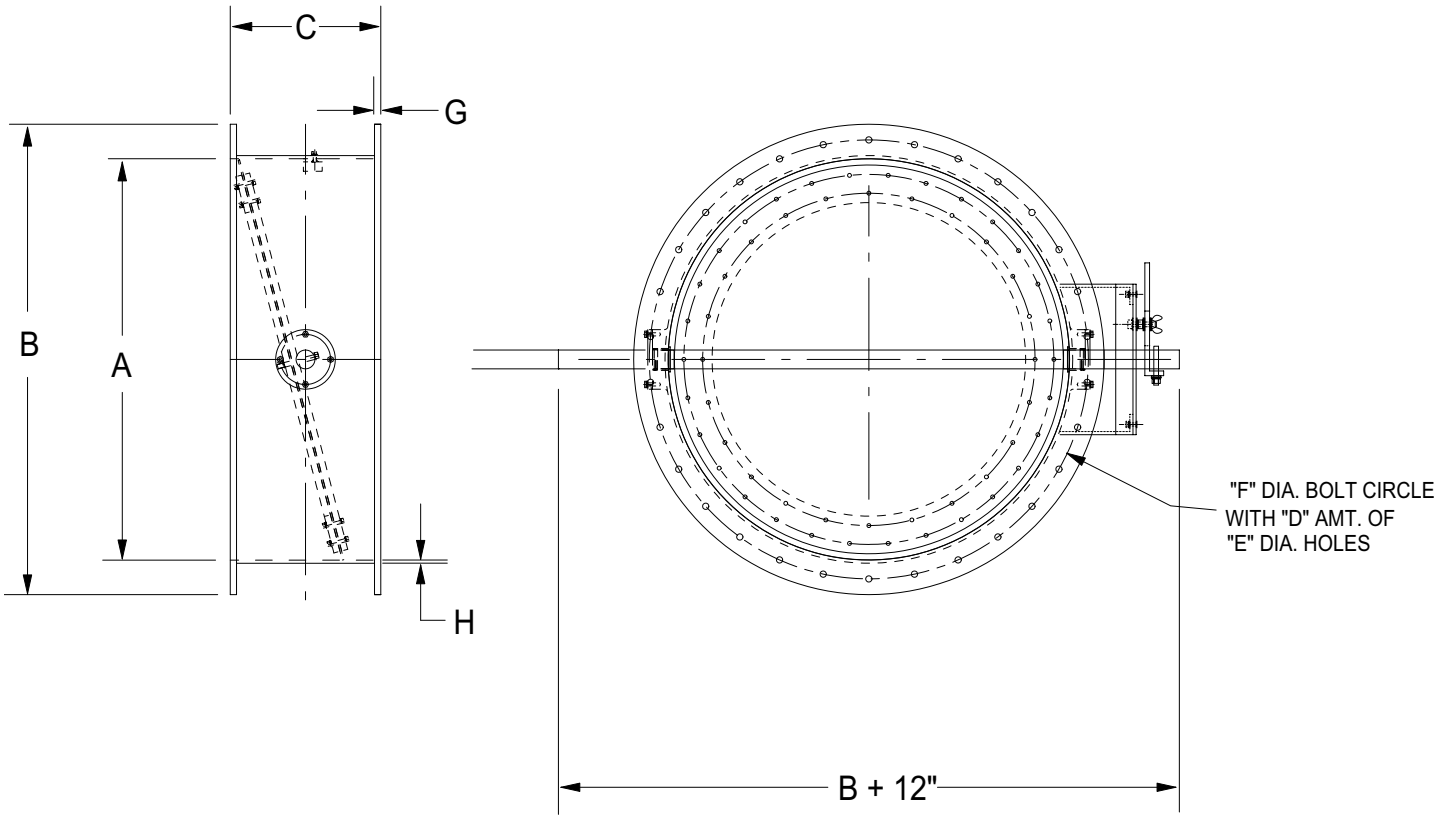

Damper Size	A	B	C	D	E	F	G	H
6	6	10-3/8	12	8	7/16	9	1/4	1/4
8	8	12-3/8	12	8	7/16	11	1/4	1/4
10	10	14-3/8	12	12	7/16	13	3/8	1/4
12	12	16-3/8	12	12	7/16	15	3/8	1/4
14	14	18-3/8	12	12	7/16	17	3/8	1/4
16	16	20/3/8	12	16	7/16	19	1/2	1/4
18	18	22-3/8	12	16	7/16	21	1/2	1/4
20	20	24-3/8	12	20	7/16	23	1/2	1/4
24	24	28-3/8	12	20	7/16	27	1/2	1/4
30	30	34-3/8	12	28	7/16	33	1/2	5/16
36	36	40-3/8	12	32	7/16	39	1/2	5/16
42	42	46-3/8	12	36	7/16	45	5/8	3/8
48	48	54-3/8	12	44	9/16	52	5/8	3/8
54	54	60-3/8	12	44	9/16	58	5/8	3/8
60	60	66-3/8	12	52	9/16	64	5/8	3/8

Fiberglass Inlet Vane Damper

Features

- Material: Housing and blades: fiberglass, Hetron 99P ® polyester resin with 3% antimony trioxide, Class 1 flame spread of 25. Color gray.
- Hardware: 304 stainless steel.
- Bearings: Fiberglass reinforced polypropylene.
- Operator: Fiberglass manual locking hand quadrant.
- Extended Shaft
- Flat Capped Hub

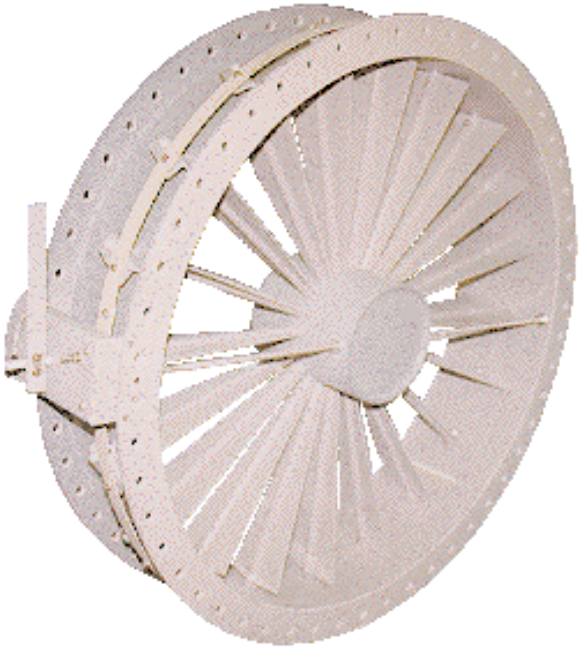

Optional Accessories

- Special Resins: Vinylester resin with or without carbon impregnation and static grounding.
- Bolt Holes: Flange can be drilled customer specifications.
- Operator: Motor operator available.
- Hub: Bullet nosed hub available.
- Custom Sizes: Other sizes can be made to match existing equipment.
- Custom flanges

Note: Inlet air rotation, clockwise or counter clockwise, is determined from air inlet side of fan.

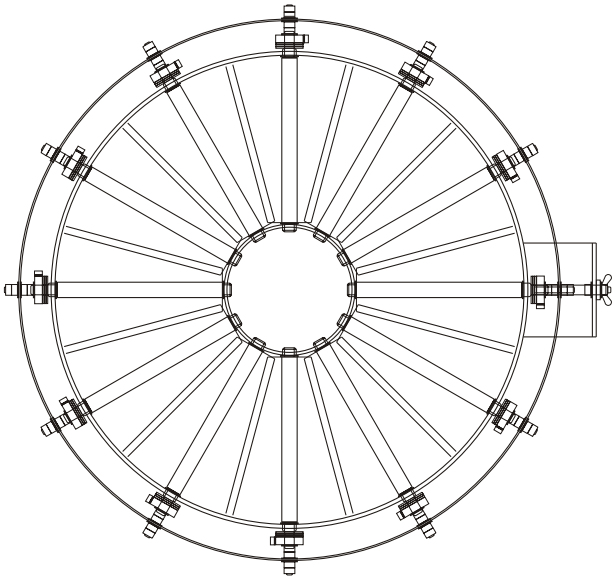

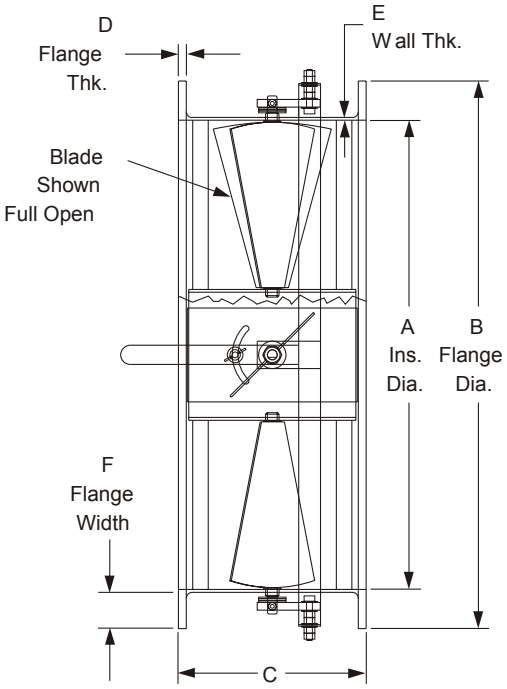

	12"	14"	16"	18"	20"	24"	30"	32"	36"	42"	48"
A	12	14	16	18	20	24	30	32	36	42	48
B	16-1/2	18-1/2	20-1/2	22-1/2	24-1/2	28-1/2	34-1/2	36-1/2	41	47	53
C	12	12	12	12	12	12	12	12	12	12	12
D	3/8	3/8	3/8	3/8	3/8	1/2	1/2	1/2	1/2	1/2	1/2
E	1/4	1/4	1/4	1/4	1/4	5/16	5/16	5/16	5/16	5/16	5/16
F	2-1/4	2-1/4	2-1/4	2-1/4	2-1/4	2-1/4	2-1/2	2-1/2	2-1/2	2-1/2	2-1/2

PCP Poly Composite Products, LLC

51 North Street / P.O. Box 400
LeRoy, NY 14482
Phone: (585) 768-7633 Fax: (585) 768-7634
Website: www.PolyCP.com
Email: sales@PolyCP.com